Luci FLEX α F

Illuminance data

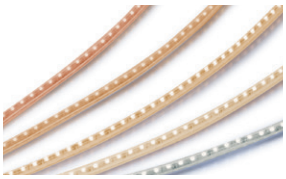

LFXF10
Luci FLEX α F 10mm pitch

Color temparature

7100K 4200K 3500K 3000K 2700K 2400K

Direct horizontal surface light intensity distribution chart

LFXF10-T1000W-D-CL-I

Light source color	7100K
Brightness	106 cd
Luminous flux	326 lm
Color rendering index	Ra 74

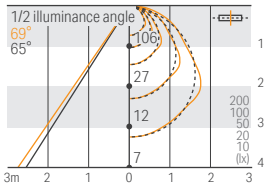

LFXF10-T1000W-W-CL-I

Light source color	4200K
Brightness	118 cd
Luminous flux	317 lm
Color rendering index	Ra 70

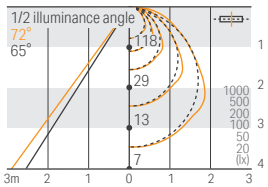

LFXF10-T1000W-WW-CL-I

Light source color	3500K
Brightness	96 cd
Luminous flux	298 lm
Color rendering index	Ra 75

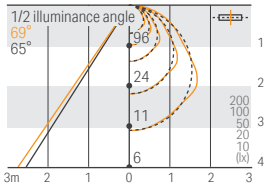

LFXF10-T1000W-L30-CL-I

Light source color	3000K
Brightness	108 cd
Luminous flux	292 lm
Color rendering index	Ra 70

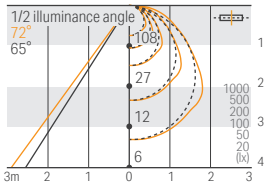

LFXF10-T1000W-L27-CL-I

Light source color	2700K
Brightness	90 cd
Luminous flux	278 lm
Color rendering index	Ra 71

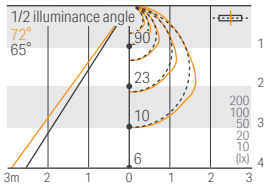

LFXF10-T1000W-L24-CL-I

Light source color	2400K
Brightness	87 cd
Luminous flux	251 lm
Color rendering index	Ra 65

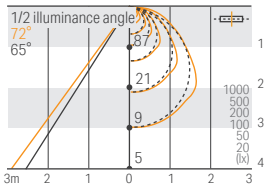

Recommendend dimensions and illumination distribuitions @2700K

Cornice lighting-1 CH=2800

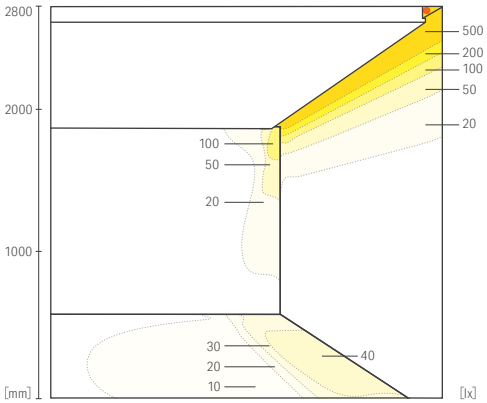

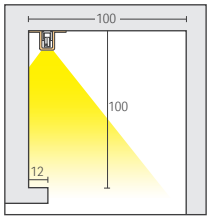

Cornice lighting-2 CH=2800

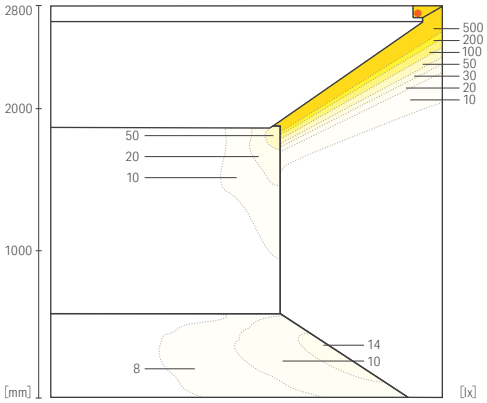

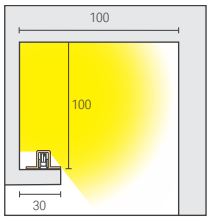
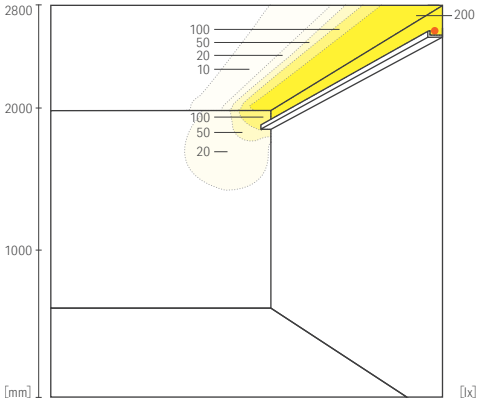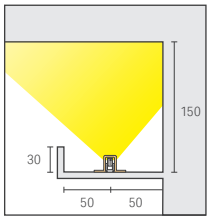
Cove lighting CH=2800